Three Way Kitchen Faucet

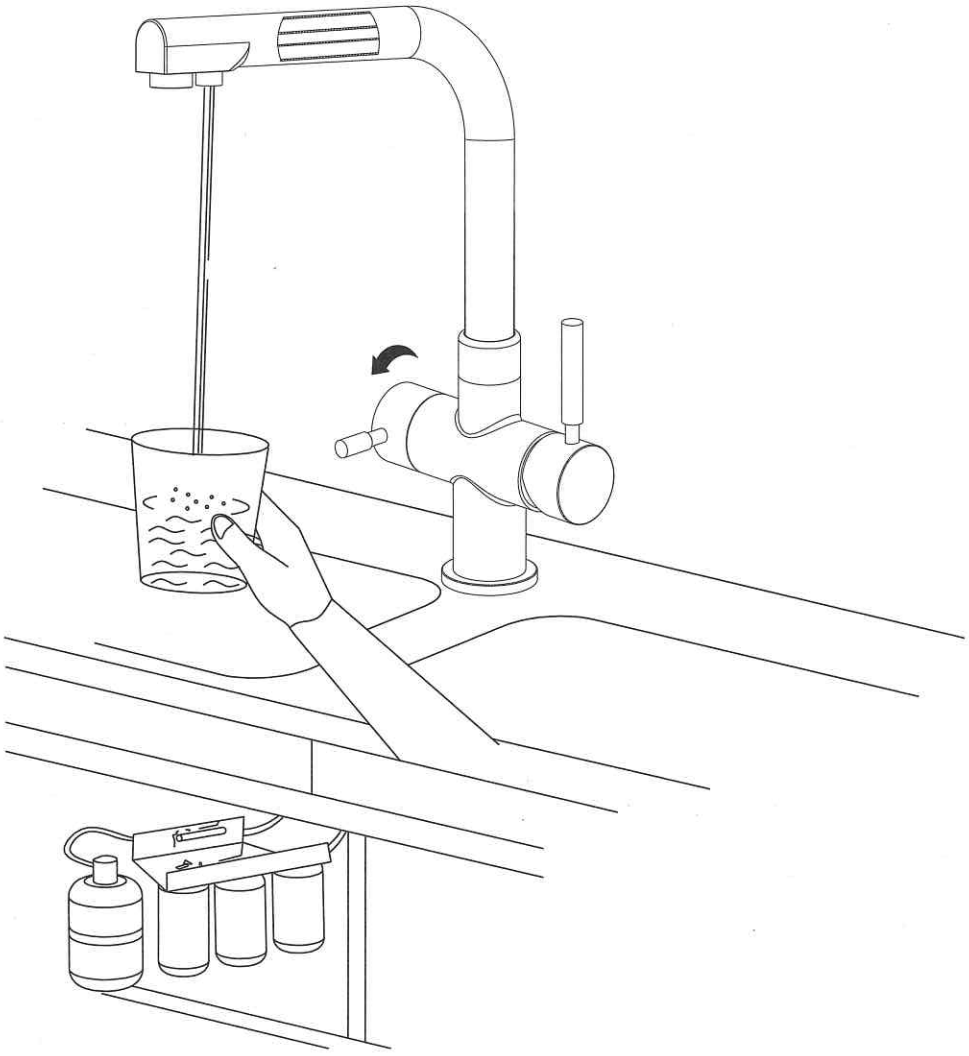

Replacement Parts

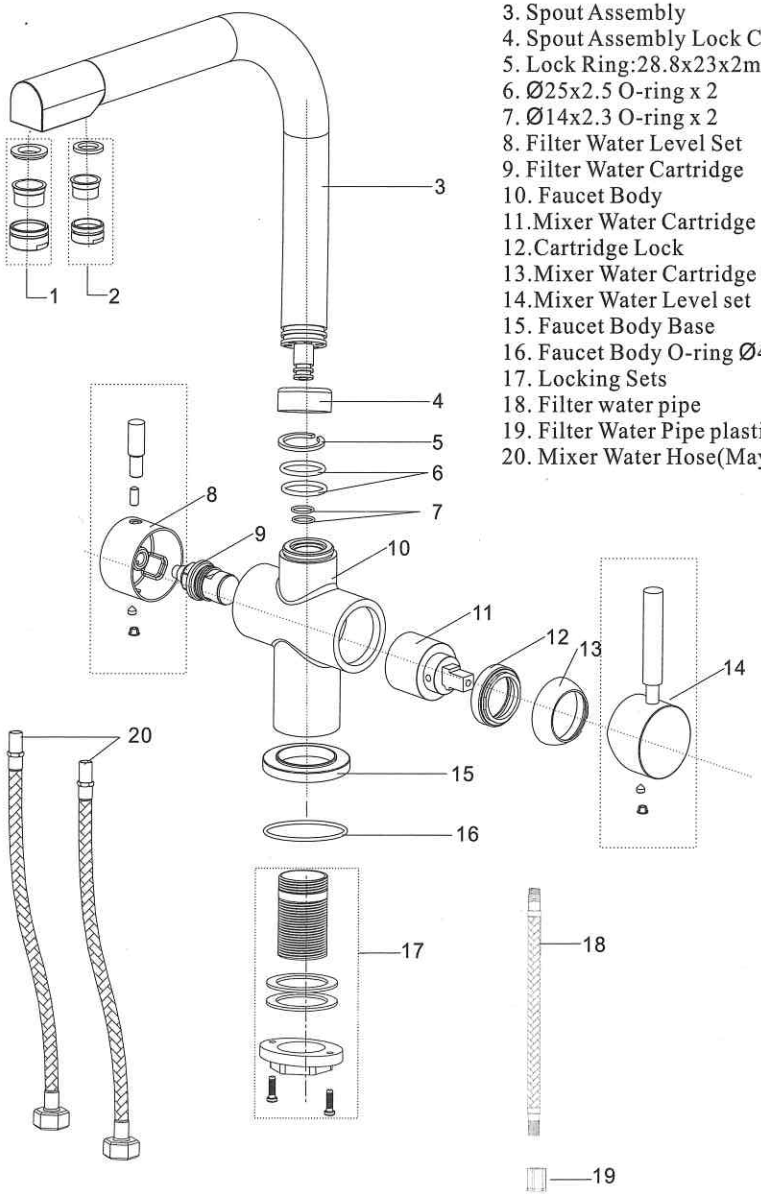

1.Mixer Water Bubbles
2.Filter Water Bubbles
3. Spout Assembly
4. Spout Assembly Lock Cover
5. Lock Ring:28.8x23x2mm
6. Ø25x2.5 O-ring x 2
7. Ø14x2.3 O-ring x 2
8. Filter Water Level Set
9. Filter Water Cartridge
10. Faucet Body
11.Mixer Water Cartridge
12.Cartridge Lock
13.Mixer Water Cartridge Cover
14.Mixer Water Level set
15. Faucet Body Base
16. Faucet Body O-ring Ø47x3
17. Locking Sets
18. Filter water pipe
19. Filter Water Pipe plastic Adapter
20. Mixer Water Hose(Maybe not included)

Profile Drawing

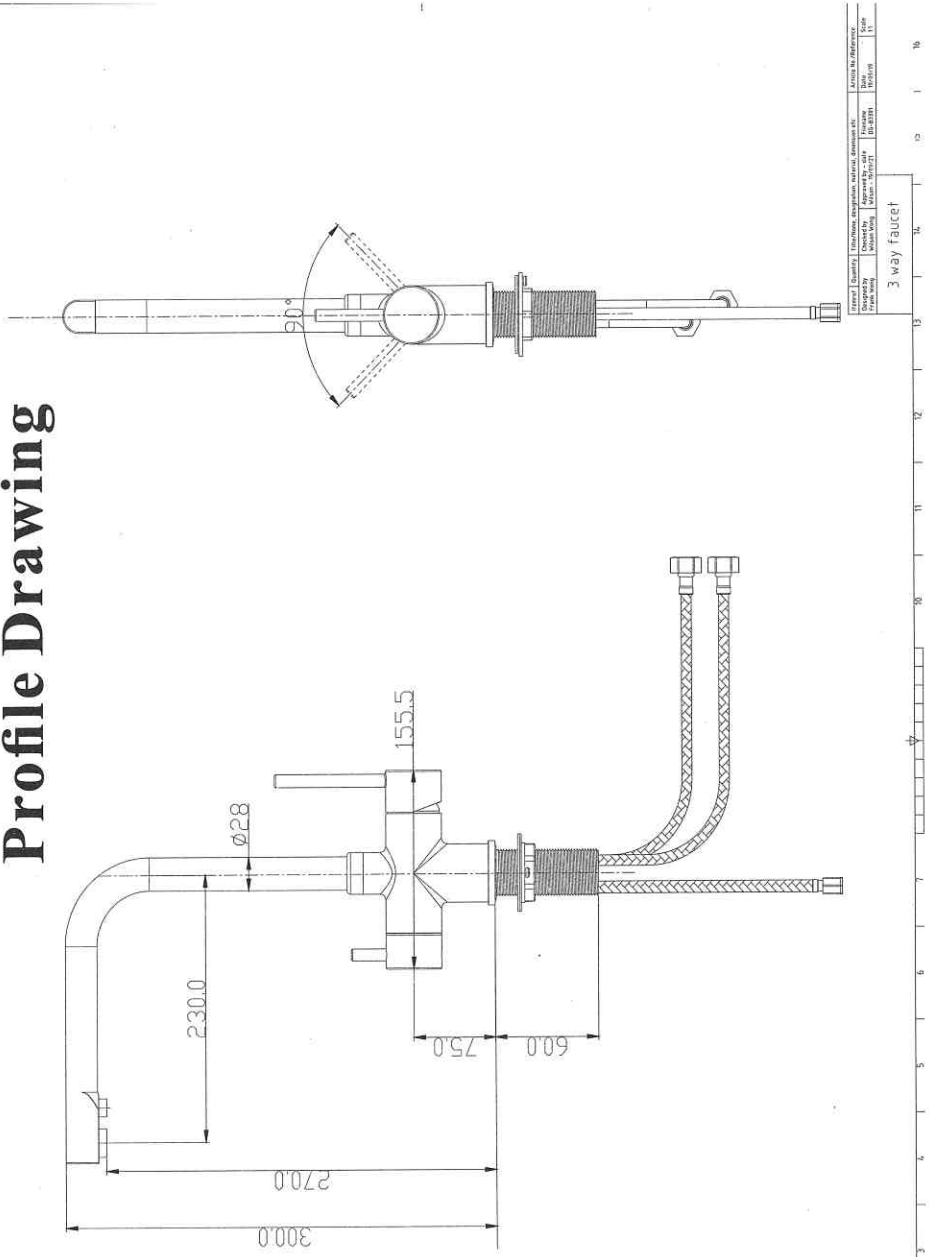

Faucet Installation Procedures

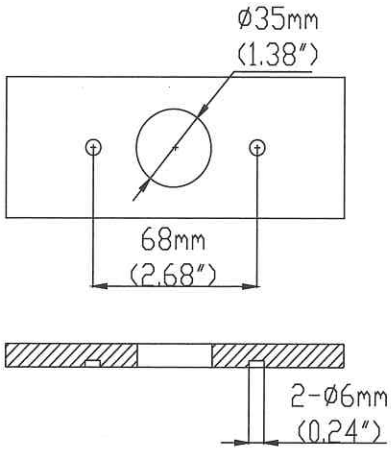

Step ①

Please be notice Filter water/cold/hot water position "mark"

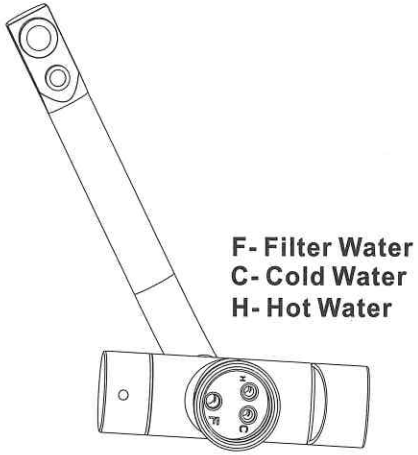

Step ②

Fixed Lock bolt before installing on countertop

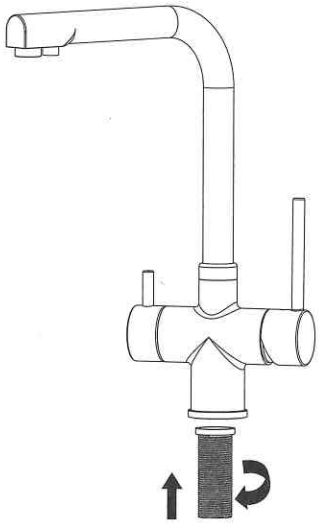

Step ③

Then connected filter water pipe

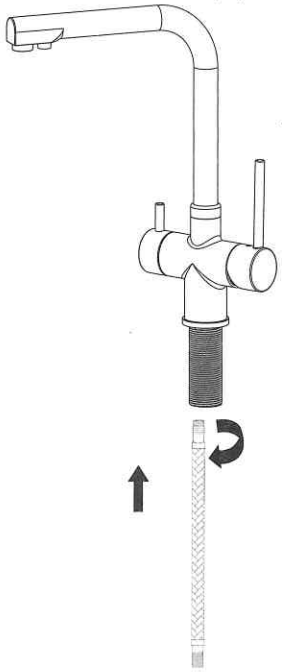

Step ④

Installing faucet on counter top

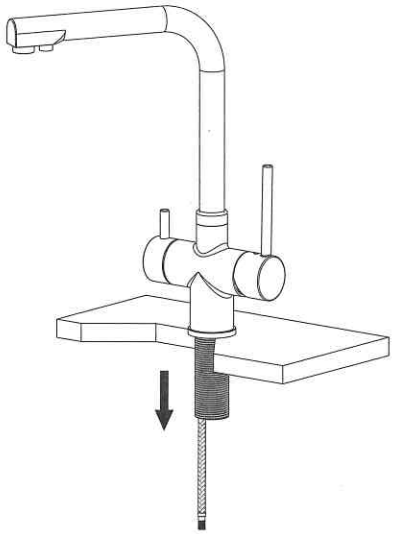

Step ⑤

Then installing rubber washer, metal washer and fixed by lock nut at last

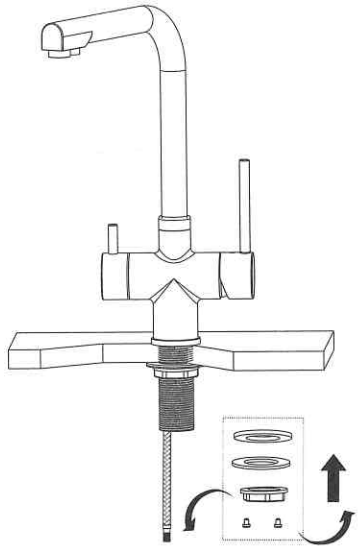

Step ⑥

Then fixed hot & cold water hose by correct "mark" hole

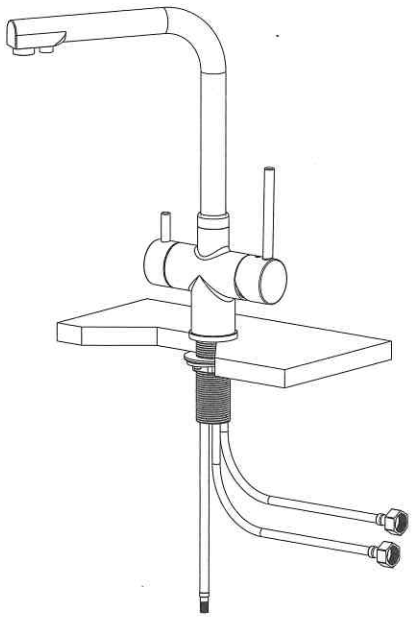

Step ⑦

Then connected filter water pipe

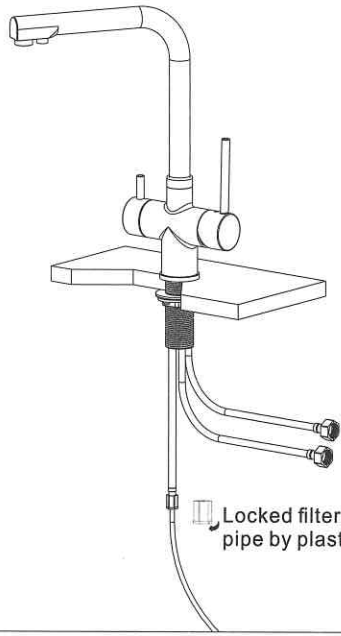

Step ⑧

Connected cold&hot water hose to supply water

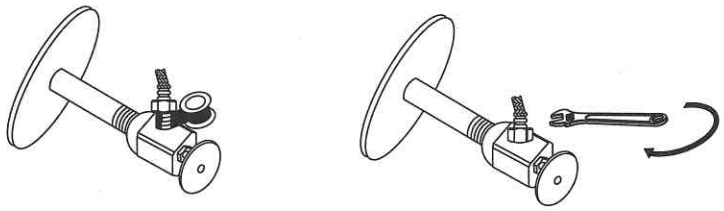

Step ⑨

Testing faucet whether it working in good condition

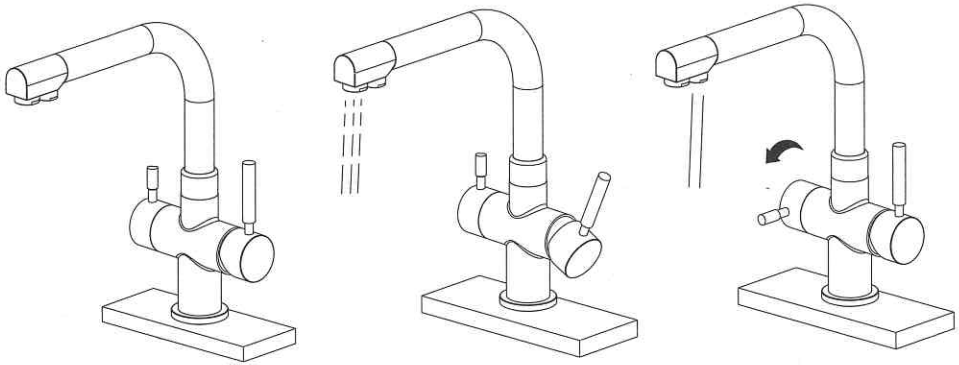

Notice

Please removal all the sand, silt etc. anything maybe block the cartridge before fixed to your kitchen Counter top. If the faucet cannot work, please send to a qualified person to repair it

Step ⑩

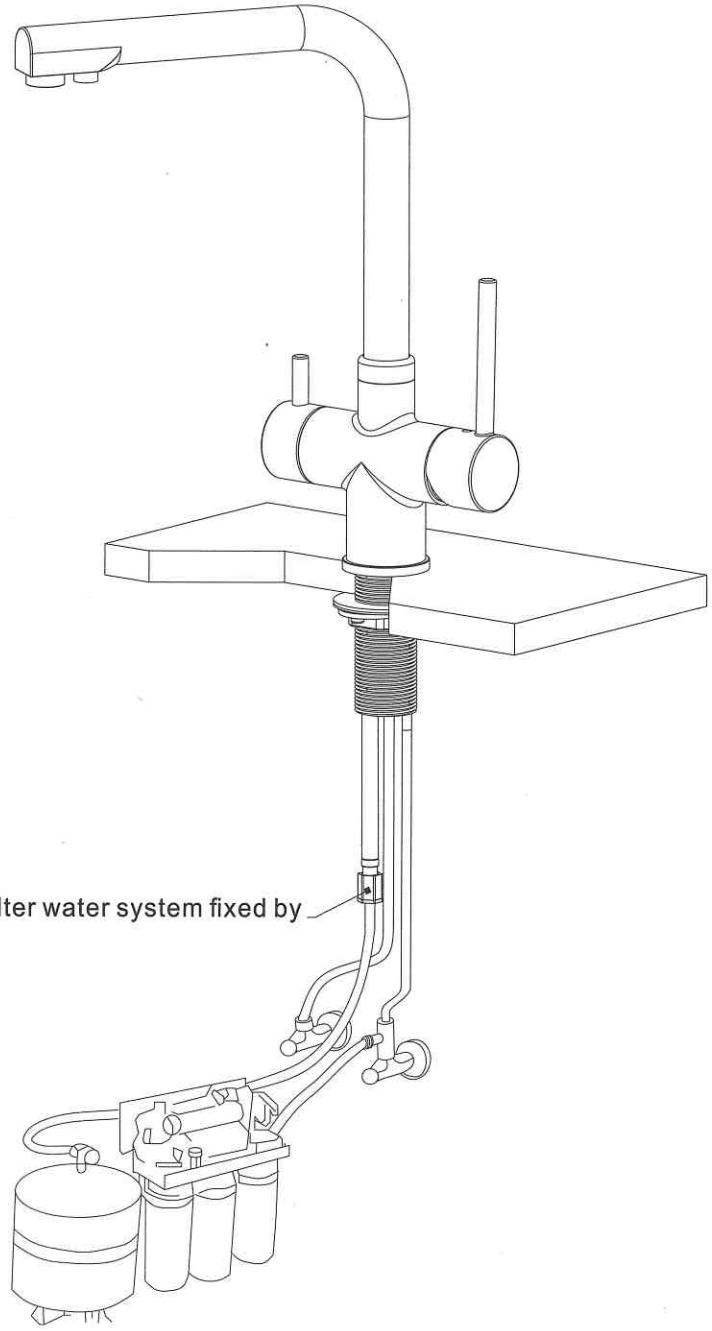

Step ⑪

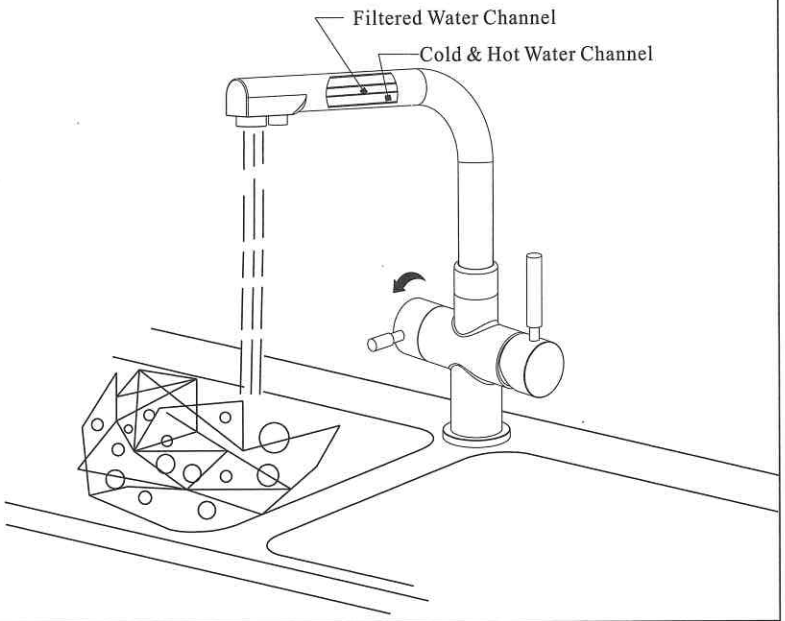
Filtered Water Channel
Cold & Hot Water Channel

Step ⑫

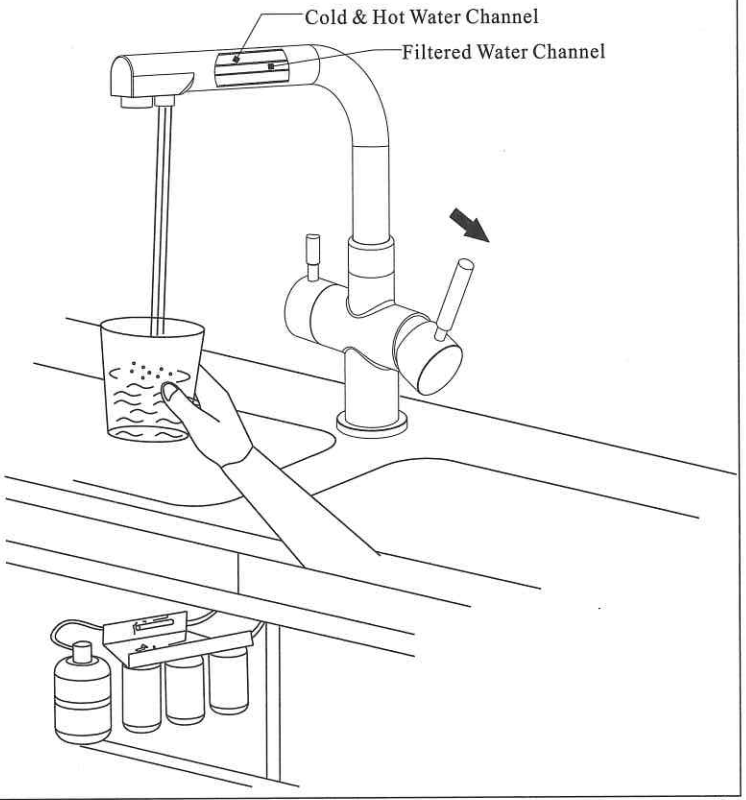
Cold & Hot Water Channel
Filtered Water Channel